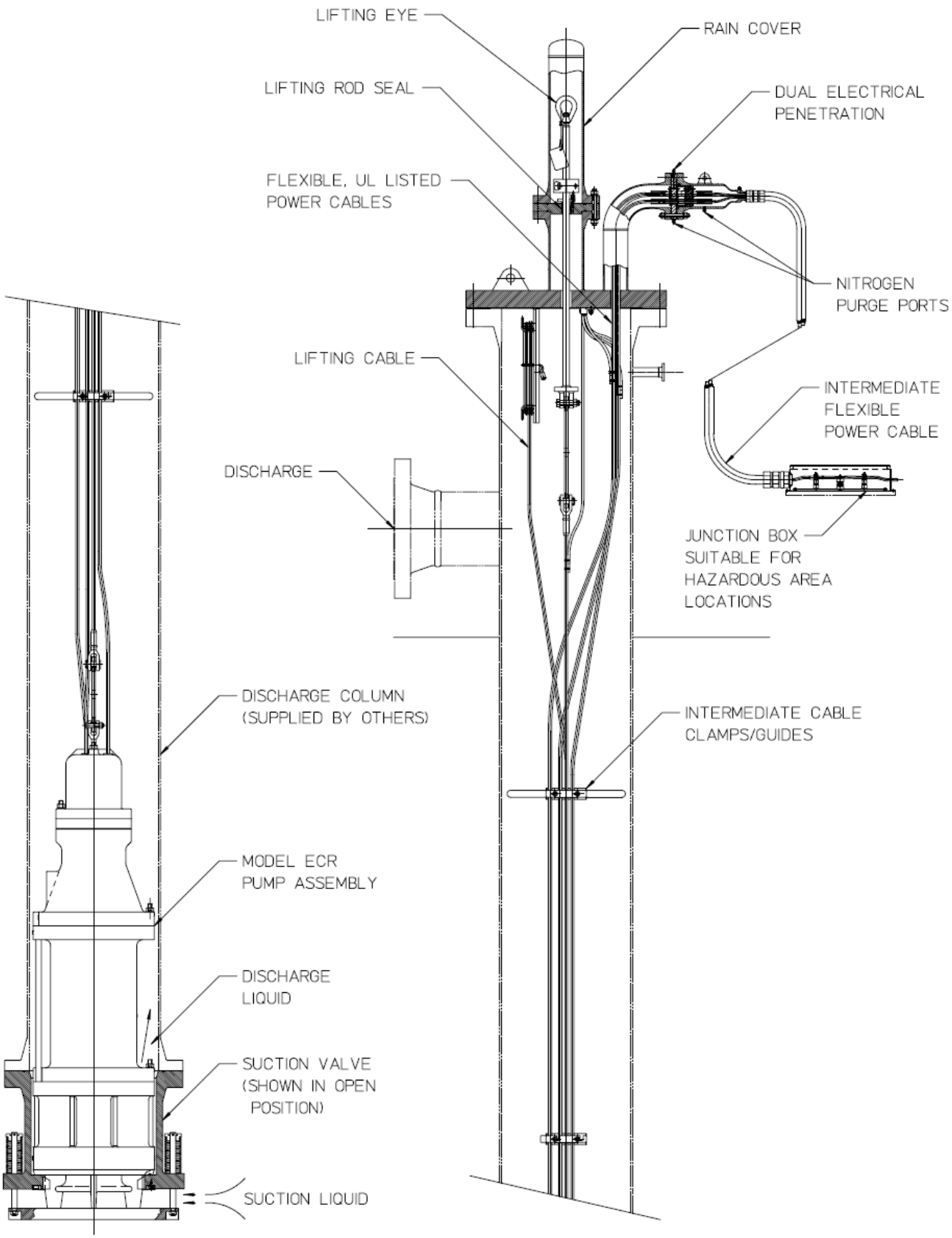

MODEL ECR RETRACTABLE PUMP SYSTEM

EBARA INTERNATIONAL CORPORATION
SPARKS, NEVADA, USA

CRYODYNAMICS DIVISON

SK-11272 EW/JM 7/09/02 REV NC